FY 504 M

Material	Cast iron

Dimensions

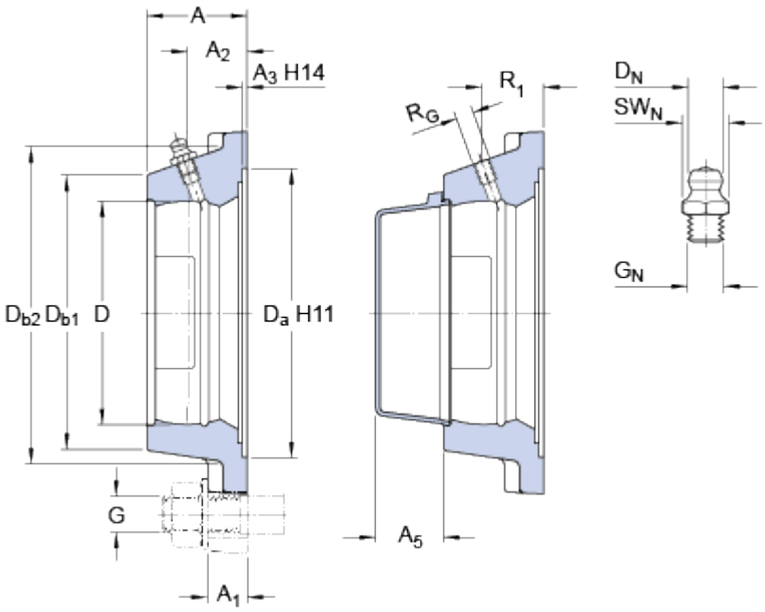

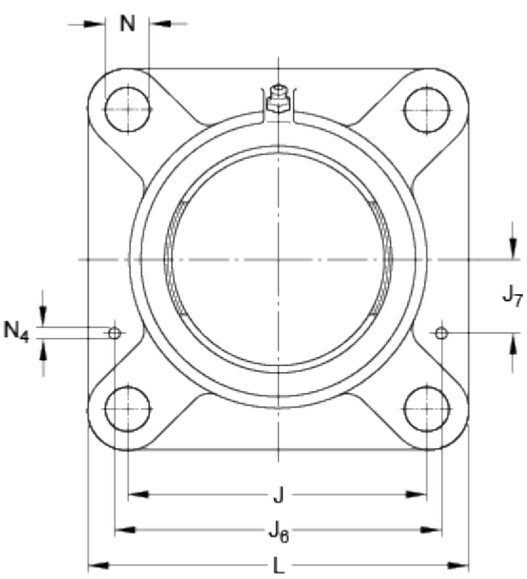

D	47	mm
D_a	68.3	mm
D_{b1}	57	mm
D_{b2}	63	mm
A	29.5	mm
A_1	11	mm
A_2	19	mm
A_3	3.2	mm
A_5	18.5	mm
J	63.5	mm
L	86	mm
N	11.5	mm

Threaded hole

R_G	1/4-28 UNF	
R_1	20.5	mm

Grease fitting

D_N	6.5	mm
SW_N	7	mm
G_N	1/4-28 SAE-LT	

Dowel pins

J_6	74	mm
J_7	16	mm
N_4	4	mm

Mass

Mass housing	0.38	kg

Mounting information

Recommended diameter for attachment bolts, mm	G	10	mm
Recommended diameter for attachment bolts, inch	G	0.375	in

Associated products

End cover	ECY 204